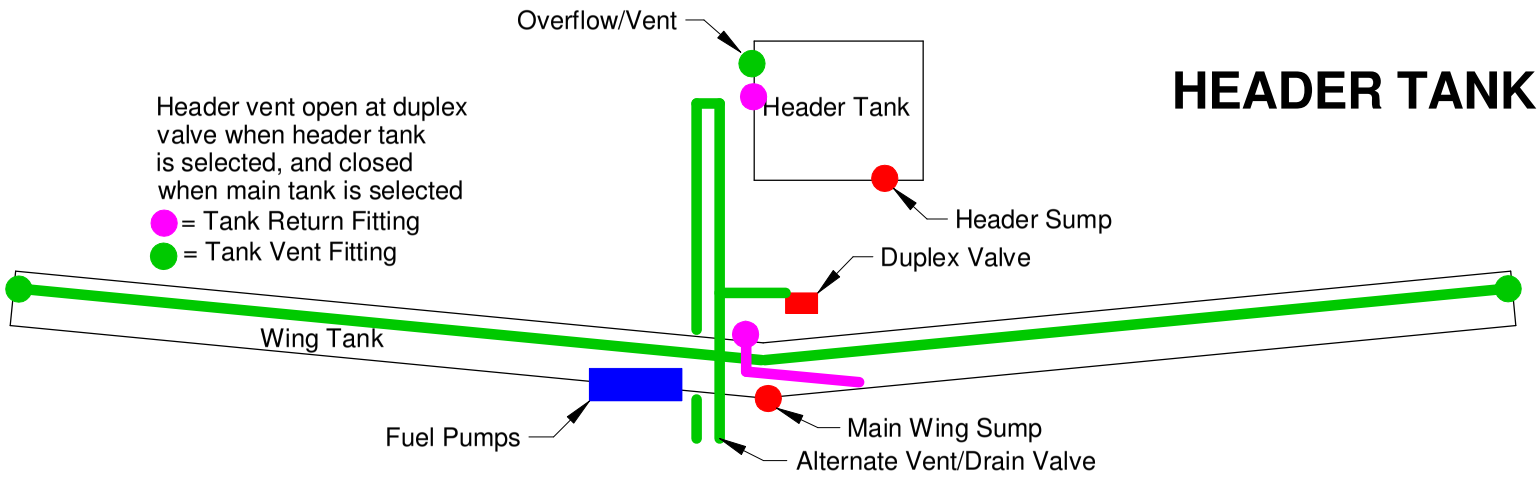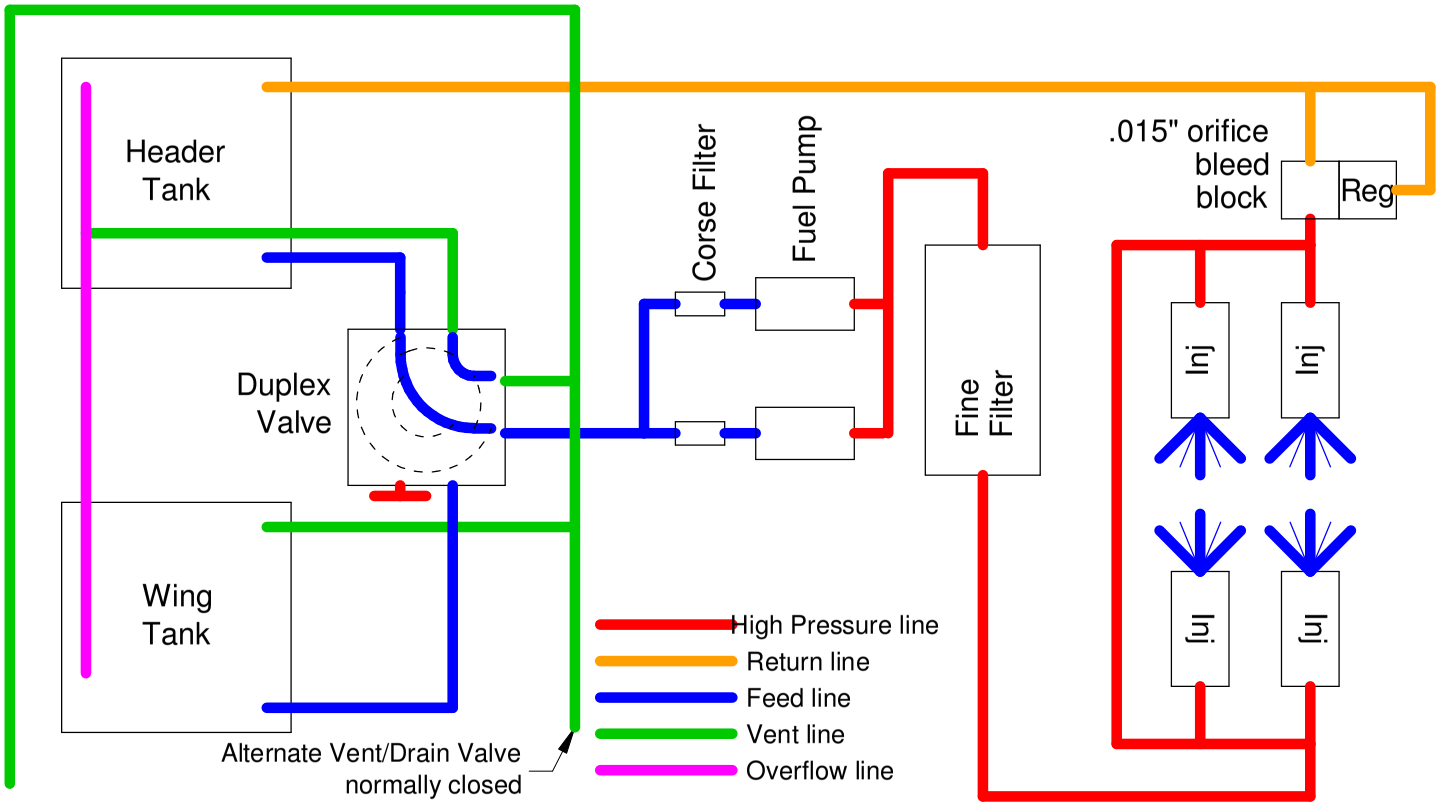HEADER TANK SELI